Vertical Fitness Equipment Multifunctional Fitness Rig

Uprights size: 65 x65 x3mm, total length is 270cm.

Other accessories can be added according to the customers' exact needs.

The color of the product can be customized according to the requirements of customer when the quantity is enough.

Unit must be bolted to the floor.

Optional Accessories which may not included :

J-hook, Safety Pins, Trainer Fulcrum, Wall Ball Target, Core Trainer,

Single Tubing Pull-up Bar, Cross Bar, Single Tubing Monkey Bar

Muscle-up Bar, Flying Cross Bar, Vertical Plate Storage, Spotter Arms

Dip Horns, Band Hook, Pegs Bar, Step Up Platform

Please refer to our website for more details of those accessories.

1. Material:	Iron
2. Color:	Black or other colors
3. Size:	65 x65 x3mm, total length is 270cm.
4. Logo:	Could add customized logo on our Rack
5. MOQ:	4pcs
6. Sample Time:	(1)3-7days-If need customized logo.
	(2)within 2days- for existing samples
7. OEM Service:	Yes
8. Certification Available:	Yes
9. Packing details:	Each in a carton
10. Production Capacity:	100,000set per month
11. Payment Term	L/C,T/T,D/P,PAYPAL,WESTERN UNION,MONEY GRAM

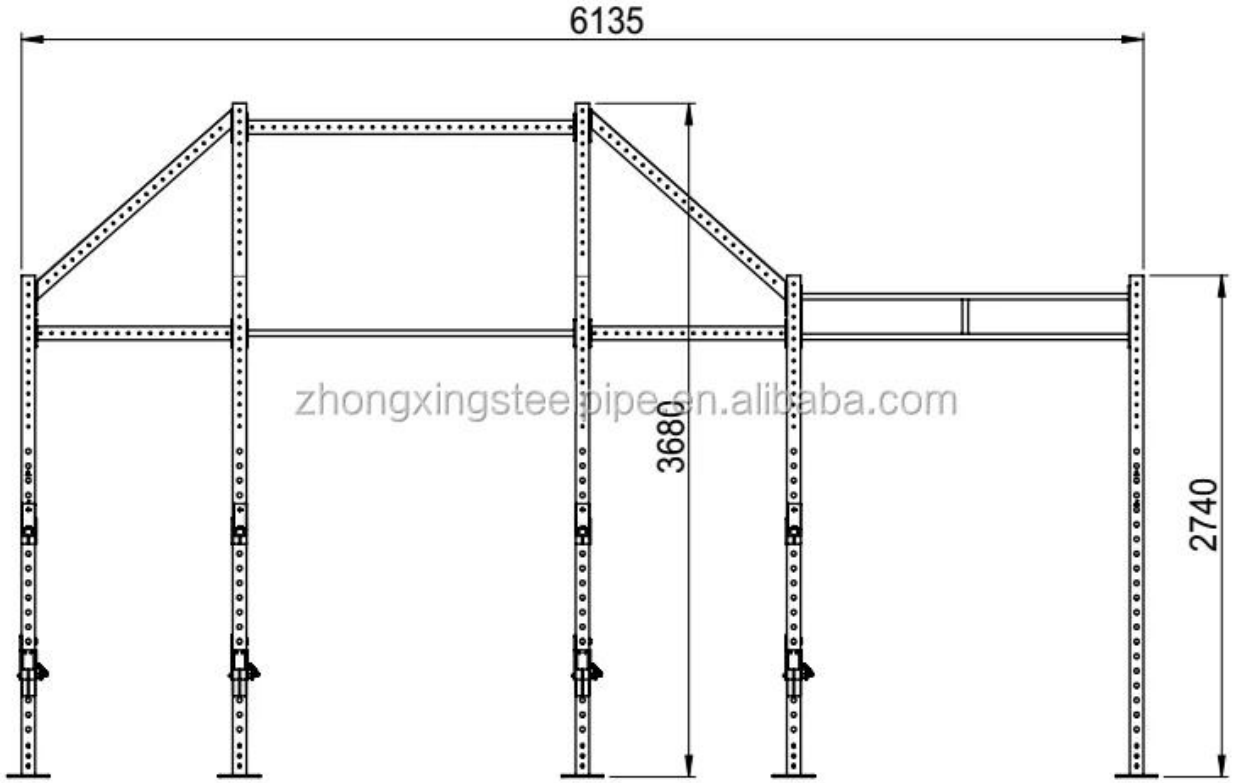

zhongxingsteelpipe.en.alibaba.com

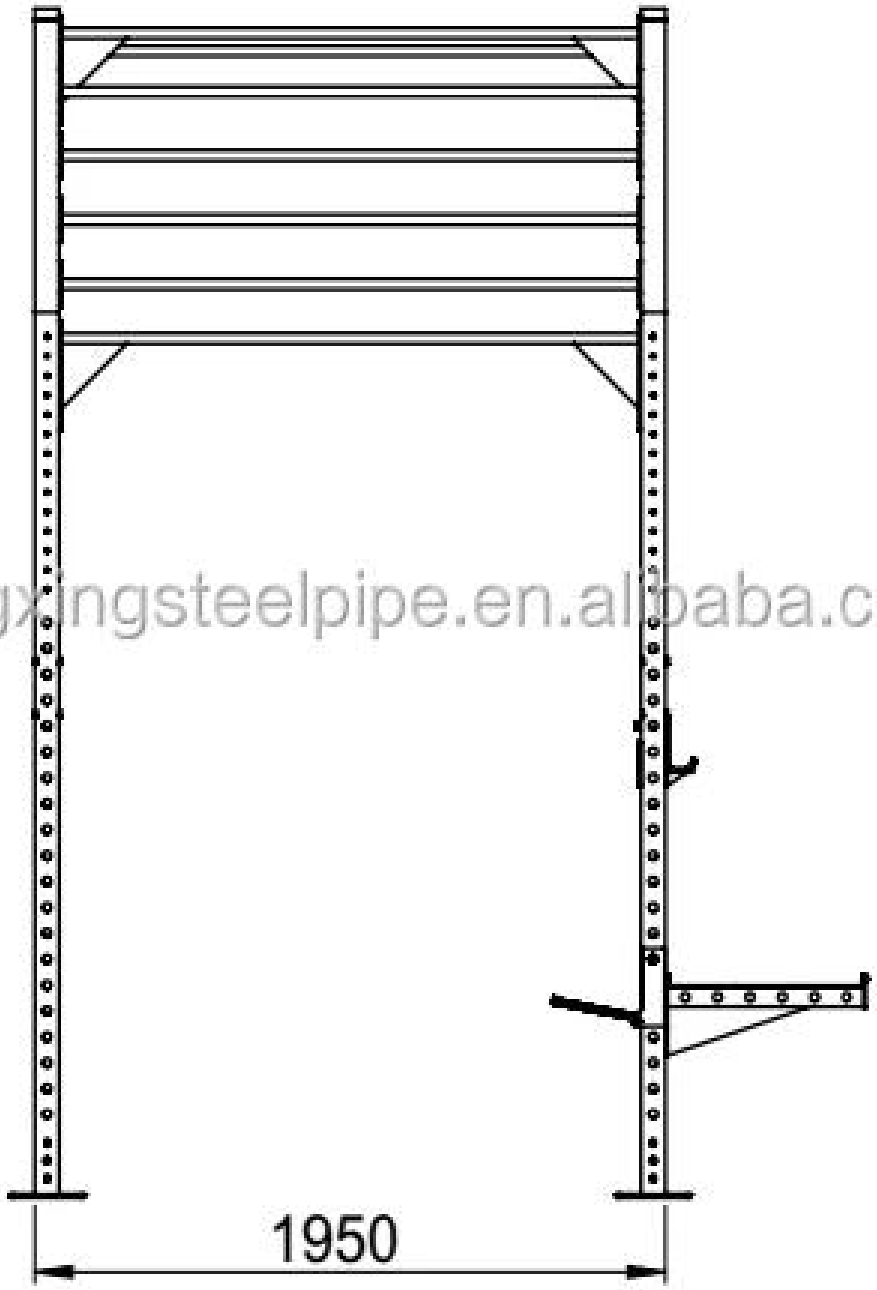

zhongxingsteelpipe.en.alibaba.com

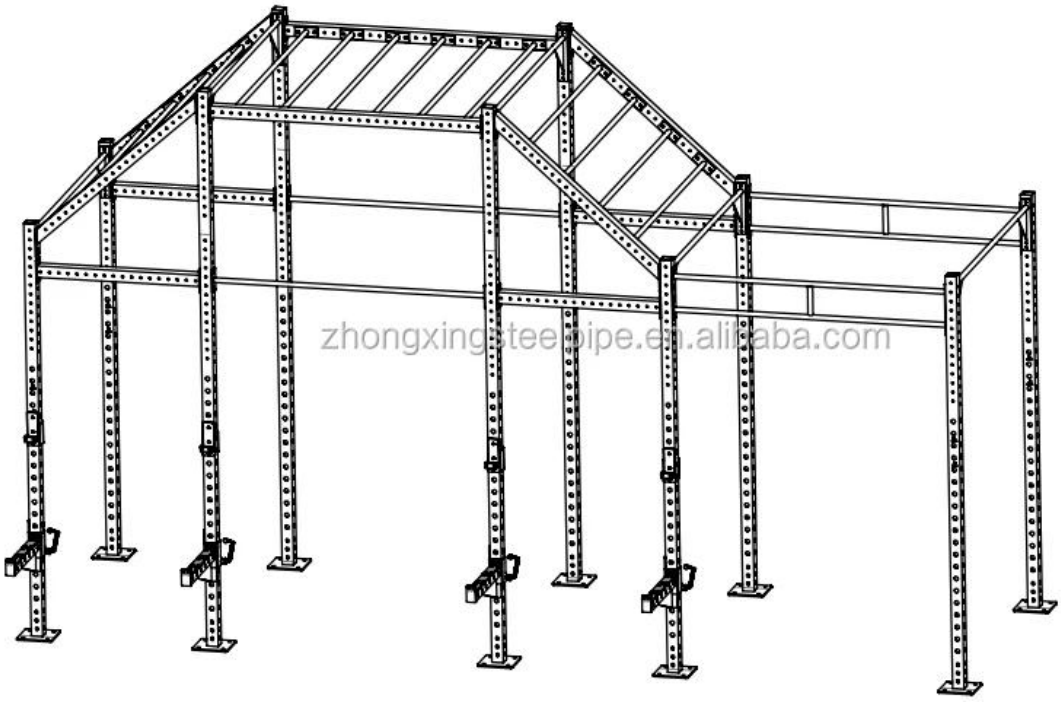

zhongxingsteelpipe.en.alibaba.com

NO.	MODEL	QTY		PICTURE	pc/box	box	MEASN:mm			N.W.:kg	G.W.:kg	CBM	TOTAL N.W.	TOTAL G.W.	TOTAL CBM
1	CF-UT9R	6	pcs		1	6	105	105	2800	22	24	0.0309	132	144	0.1852
2	CF-UT12R	4	pcs		1	4	105	105	3750	30	32	0.0413	120	128	0.1654
3	CF-MB6R（1.8米）	16	pcs		2	8	1835	180	130	13	14.3	0.0429	104	114.4	0.3435
4	CF-CB4R（1.1米）	4	pcs		2	2	1115	185	170	19.8	21	0.0351	39.6	42	0.0701
5	CF-CB6R（1.8米）	2	pcs		2	1	1835	185	170	29	31	0.0577	29	31	0.0577
6	CF-ECB34R	4	pcs		2	2	1600	205	175	23	25	0.0574	46	50	0.1148
7	CF-SCB6R（1.8米）	5	pcs		2	2.5	1845	375	120	19	21	0.0830	47.5	52.5	0.2076
8	CF-BHR	4	pcs		2	2	330	260	100	5	6	0.0086	10	12	0.0172
9	CF-SHR	4	pcs		2	2	760	550	110	16	17.5	0.0460	32	35	0.0920
10	Dual Bar-B	2	pcs		2	1	1850	380	130	30	32	0.0914	30	32	0.0914
						30.5							560.1	608.9	1.2534

zhongxingsteelpipe.en.alibaba.com

Product of line

Crossfit Rig & Cross fit products