Product Specification:

- 18-INCH LENGH x 1-INCH DIA: Great dimension provides comfort during your workout, fit well in your palm
- UNIVERSAL DESIGN: Designed for cable systems. Support up to 880 lbs (400 kg)
- TEXTURED, ANTI-SLIP HANDLE: Textured knurling handles to ensure a strong, firm grip to prevent corrosion and rust, designed with textured grip to avoid slipping during workout even with sweaty hands

item	Put down bar
Place of Origin	Shandong,China
Brand Name	XYSFITNESS
Application	Commercial Use
Gender	Unisex
Item Package Dimensions L x W x H	18.19 x 4.13 x 2.44 inches
Item Dimensions LxWxH	11.61 x 0.98 x 7.01 inches
Color	silver
Logo	Customized Logo Availale
Packing	Polybag+color carton
OEM	Accept OEM
Material	Alloy Steel
Package Weight	4.6 Pounds
is_customized	Yes

Product show

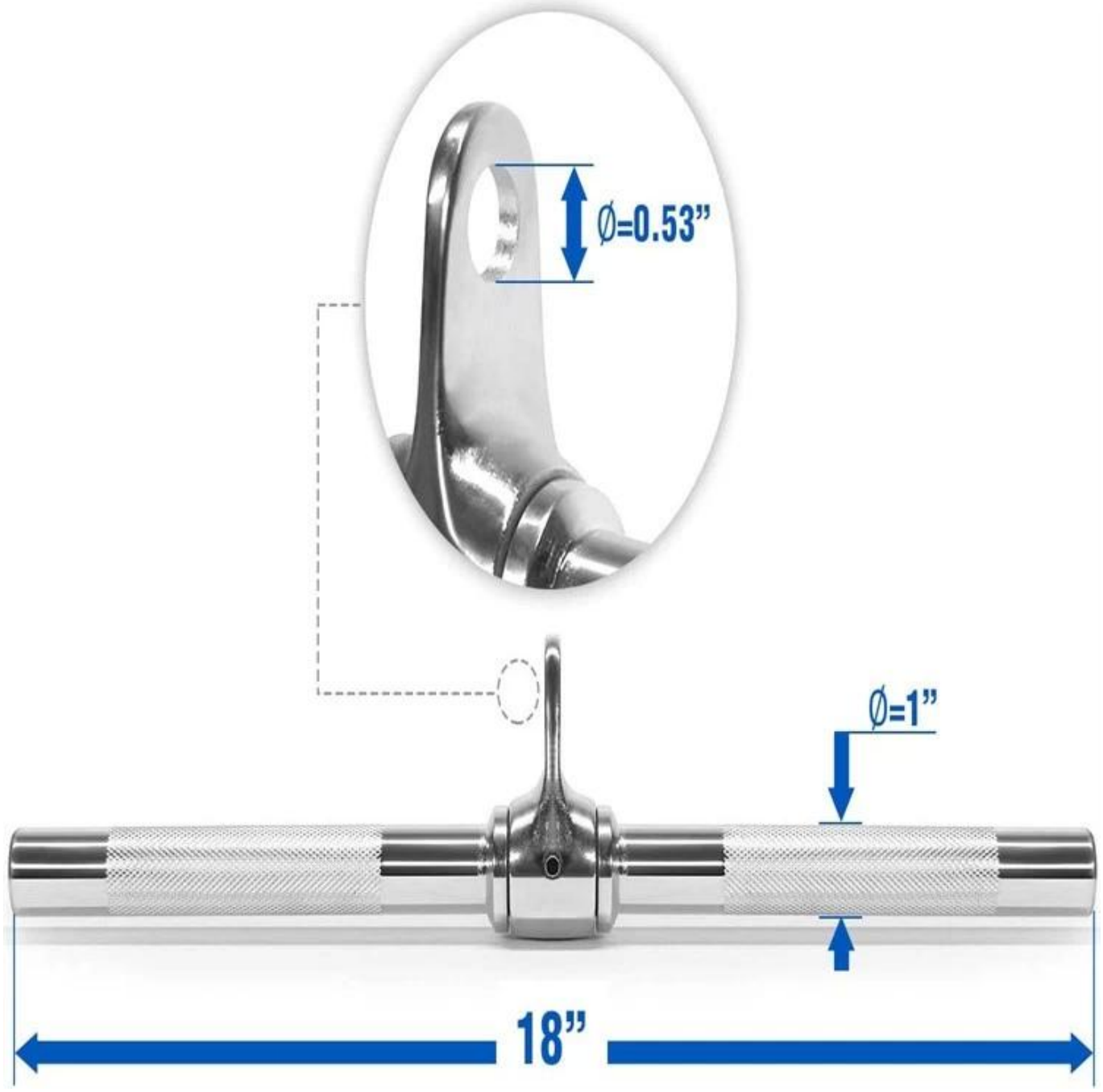
Ø=0.53”
Ø=1”
18”

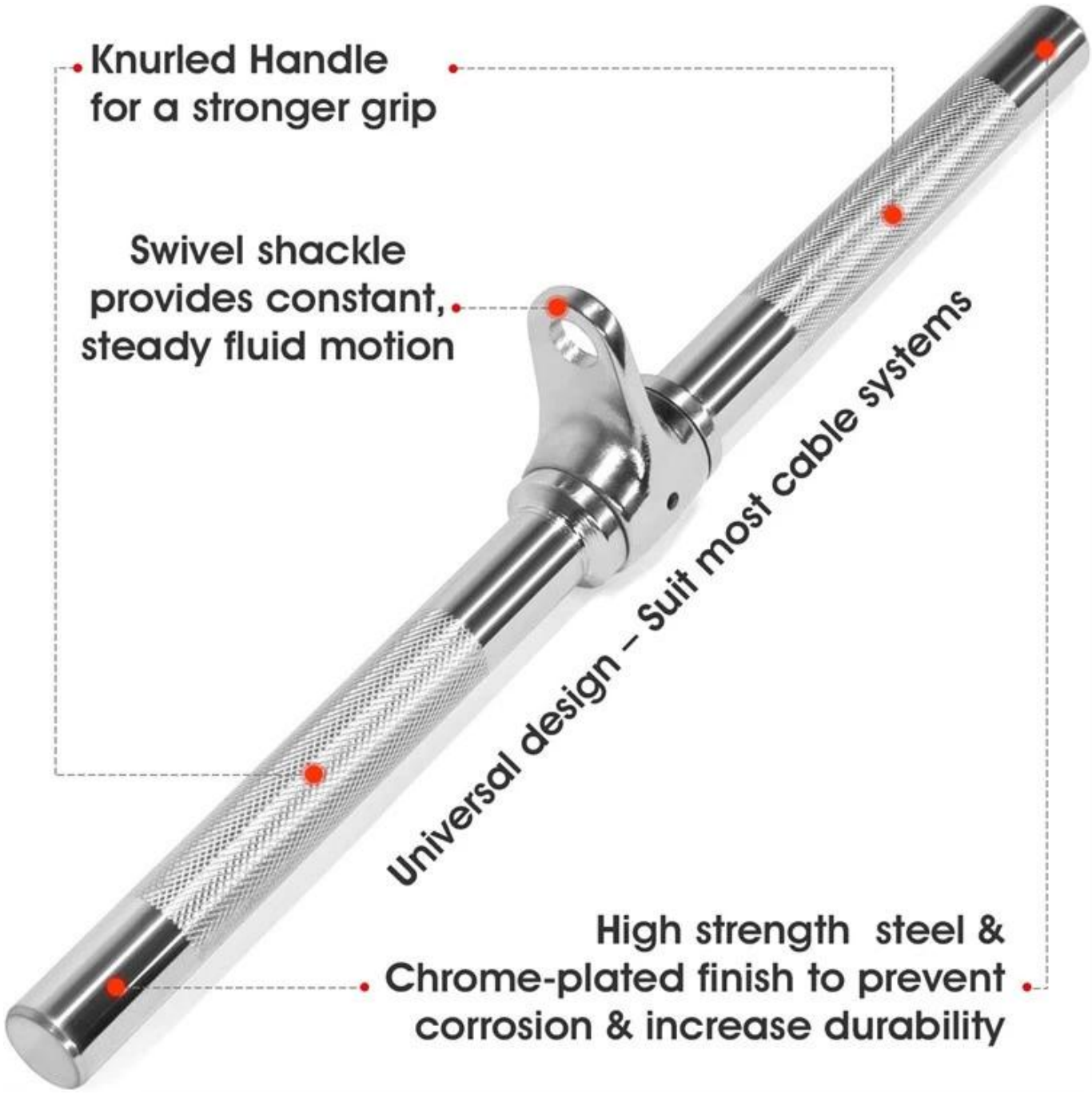
Knurled Handle
for a stronger grip
Swivel shackle
provides constant,
steady fluid motion
Universal design – Suit most cable systems
High strength steel &
Chrome-plated finish to prevent
corrosion & increase durability

Package:

Related Products

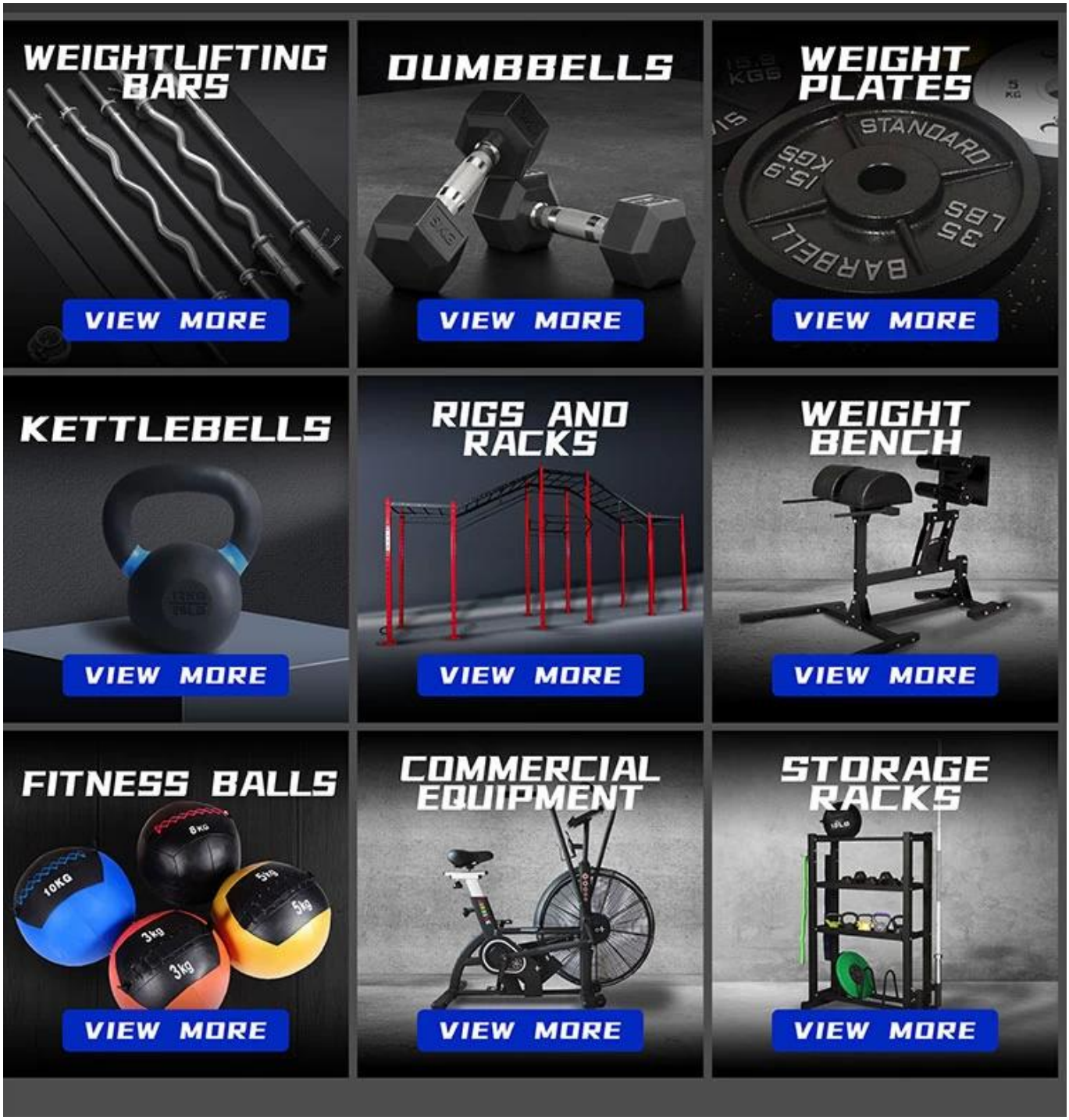

About Xingya

Shandong Xingya Sports Fitness Inc. is a professional exercise equipment enterprise for development, (**China Lat Bar Cable Machine Attachment manufacturers**) production and sales of rigs,,racks,kettlebells,weight plates and cardio equipment. We have more than 12 years' experience in exporting and 20 years' in producing fitness machines.

Upon the advanced production equipment and strict quality control system,we supply customers nice quality products.

Our company always attend different kinds of fairs. We have the Canton Fair booth every year which is offered by our government.We always go to Australia, Germany, New Zealand,America and Brazil for fitness equipment fairs.

Now we have established a solid business relationship with hundreds of customers all over the words, including North America, Europe, the Middle East and Asia.

"Creating value for all customers with innovation and quality"is our changeless promise.We sincerely hope to cooperate with you to develop together in the future.

Factory Show

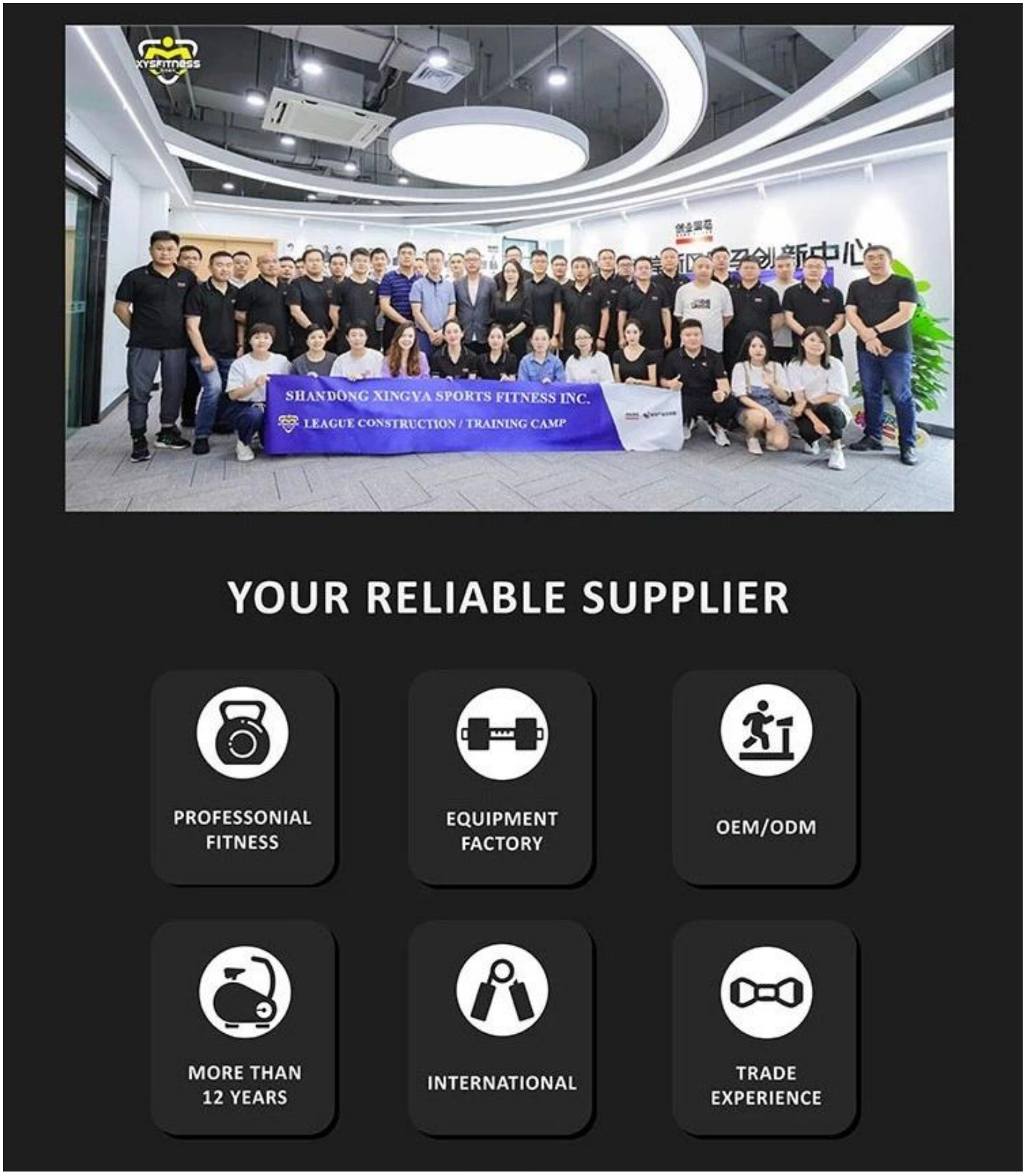

Exhibition & Fair

Logistics:

Sample order ship by DHL, UPS, FedEx, TNT, EMS etc

For mass order delivery, can be optional with terms of Exwork, FOB, CNF, CIF by air or by sea based on t he buyer’s forwarder or ours

FAQ:

Q:Do you have MOQ for product,or amount?

A:It's better for reach $3000,so that we can send to you by sea.

Q:How about the delivery time if I order?

A:The production time depends on order details,generally one container goods can be ready within 20 days.

Q:What's your payment term?

A:Generally 30% deposit and 70% balance.T/T,L/C,Alibaba trade assurance all OK.

Q:I don't have shipping forwarder in China,how can I order?

A:We have good relationship with shipping company,we can offer you most competitive shipping charge and best service